SYCAMORE

Installation instructions :
**SY9112 Apollo Tunable LED Mirror Cabinet**

**Thank you for purchasing this SycamoreLED.com product.**

Please make sure instructions are followed carefully prior to and during installation and product is not altered, otherwise warranty may not be valid. For technical support or warranty information please visit www.sycamoreLED.com, or call our dedicated technical helpline +44 (0) 113 2866686.

## IMPORTANT—Please read prior to installation

1) Please read these instructions carefully before commencing any work
2) Please retain these instructions for future reference
3) **This unit must be installed by a qualified electrician in accordance with the IEE wiring regulations and building regulations**
4) To prevent electrocution switch the power off at the mains supply before installing or maintaining this fitting
5) Ensure others cannot restore the electrical supply without your knowledge

## CONTENTS & TOOLS REQUIRED

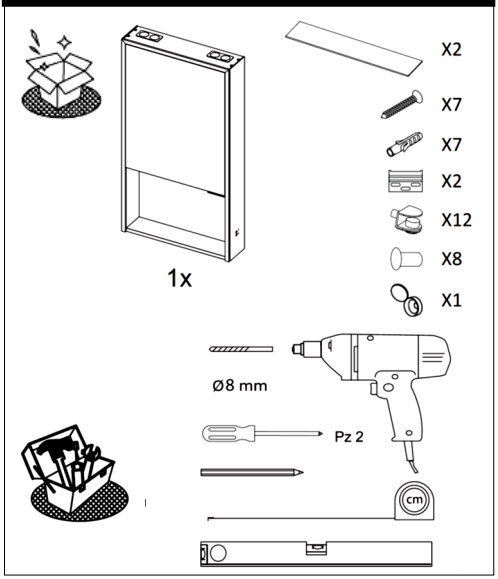


## BATHROOM REGULATIONS

This product is IP44 rated and is suitable for installation in **Zone 1, 2** & **Outside Zones**

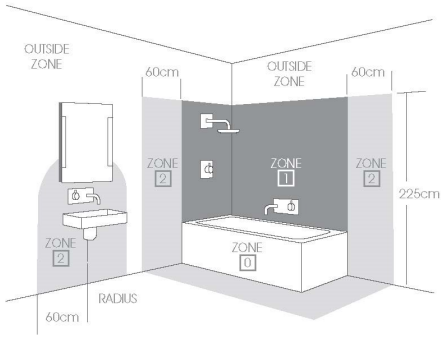


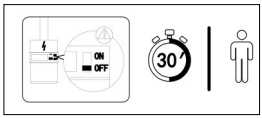


## INSTALLATION INSTRUCTIONS

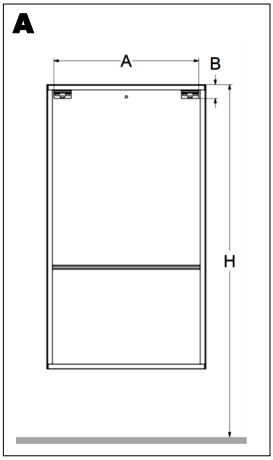


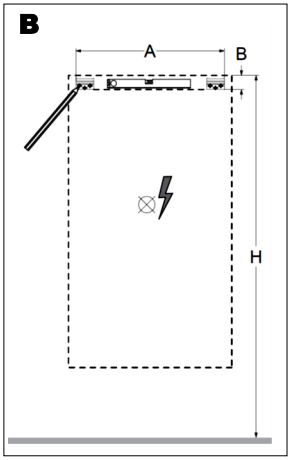


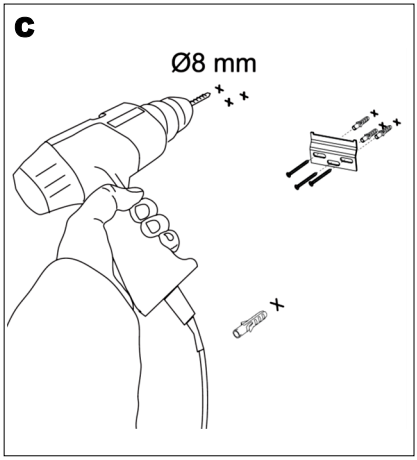

**D**

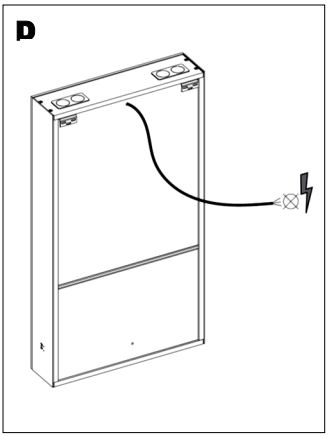

**E**

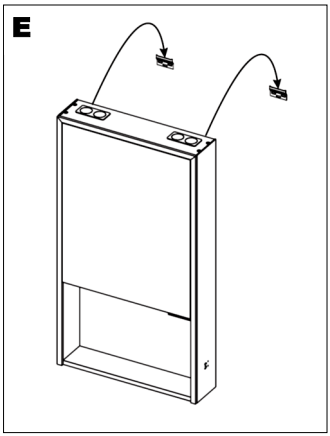

**F**

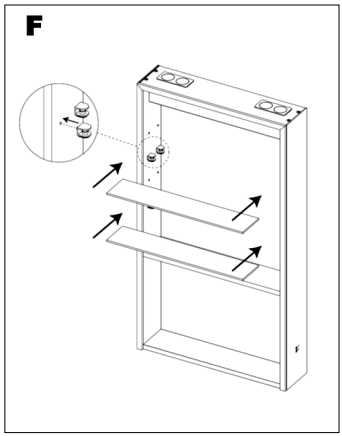

**G**

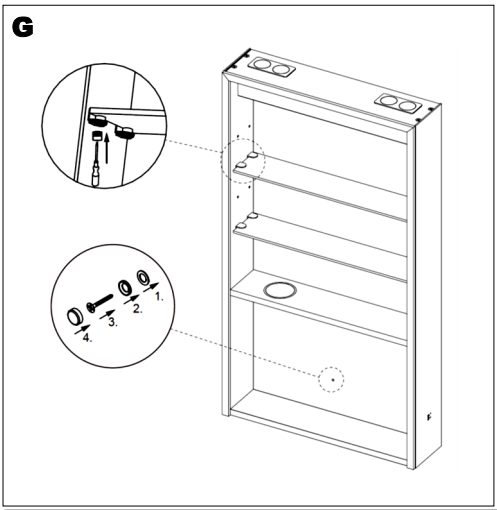


**H**

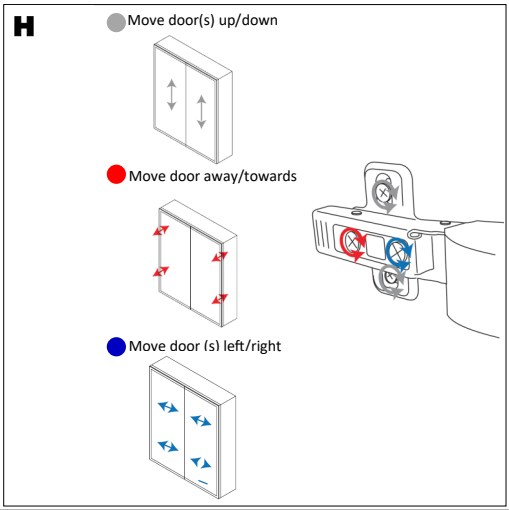


**I**

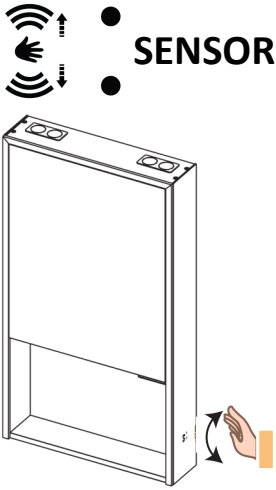

# SENSOR

**LED LIGHT ON AND OFF**

Wave hand over sensor

**COLOUR**

Hold hand over sensor to adjust CCT between 2700K and 6500K
*sensor will flash when the LEDs reach the top, or bottom of the CCT spectrum

**DIMMING**

Hold hand over sensor again to adjust dimming between 5-100% brightness.
*sensor will flash when the LEDs reach the top, or bottom of the dimming curve.

- LEDs can only be switched again after 5 seconds.
-To turn off the sensor backlight, hold your hand over the sensor when the LEDs are **OFF.**

## INSTALLATION INSTRUCTIONS (CONT)

**J**

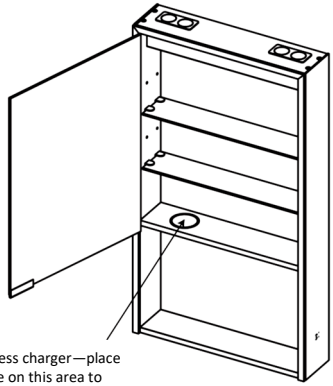

Wireless charger—place phone on this area to achieve charging function

**K**

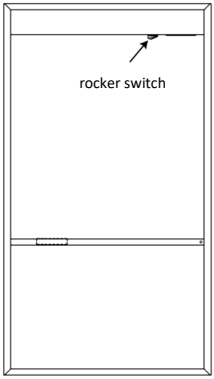


To activate the Bluetooth, press the rocker switch located at the top of the cabinet. The cabinet will give out a tone to confirm it is ready for pairing

**L**

Activate the Bluetooth on your device

**M**

Search for “PRADEL”
The mirror will give out a tone to confirm successful connection

**N**

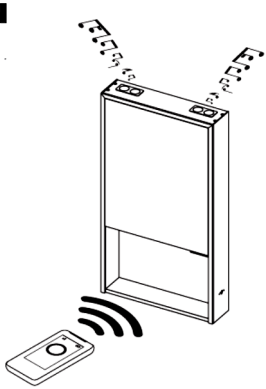

You can now listen to your favourite songs from your connected device, through the built in speakers.

## CARE IN USE

- Please note this fitting has non replaceable parts
- Always switch off or disconnect from the mains when cleaning the product.
- We recommend cleaning with a soft dry cloth. Do not use scourers, abrasives or chemical cleaners.
- Do not allow moisture to come into contact with electrical parts
- This luminaire should not be disposed of with normal household rubbish. When a replacement is purchased, this luminaire should be returned to the retailer to safely dispose of (WEEE Directive effective July 2006—Waste from Electrical & Electronic Equipment)

This product contains a light source of energy efficiency class F

**SycamoreLED.com**
**LS25 2DY**